2-POST 45U RACK

BEFORE

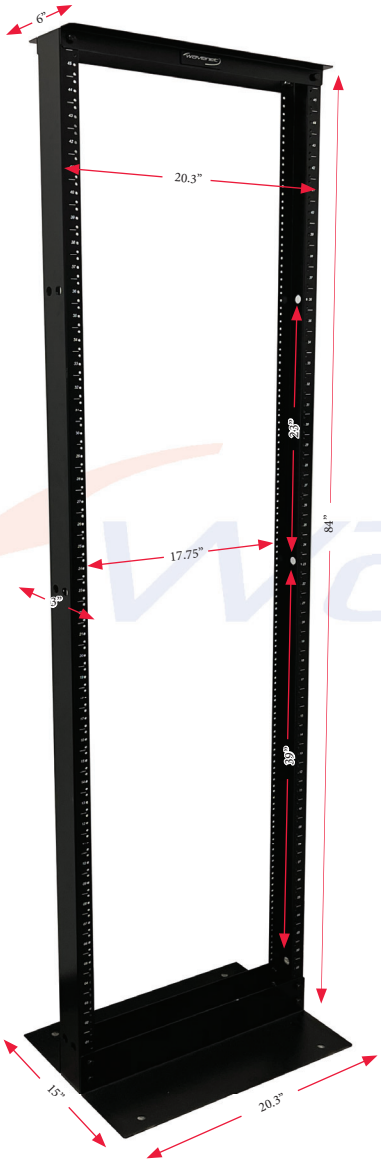

AFTER

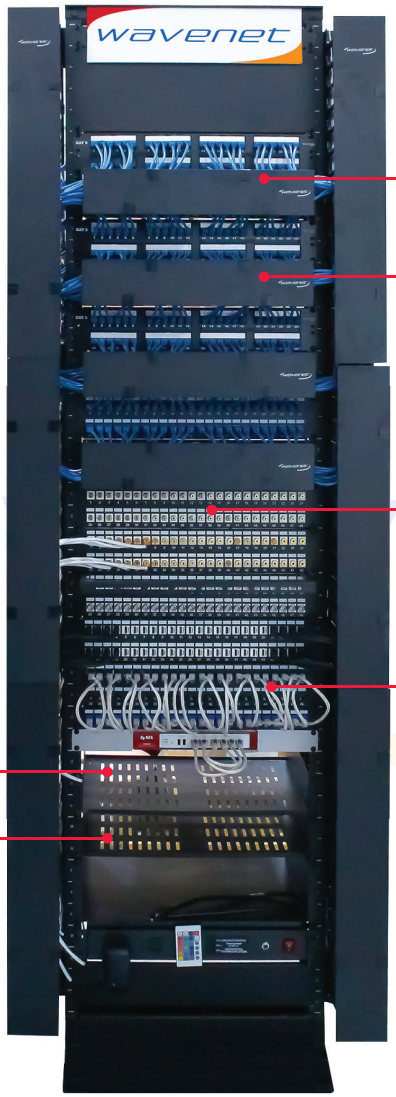

RELATED PRODUCTS



HIGH-DENSITY SINGLE-SIDED HORIZONTAL CABLE MANAGERS

- PART NO. MDH-1U
- PART NO. MDH-2U
- PART NO. MDH-3U

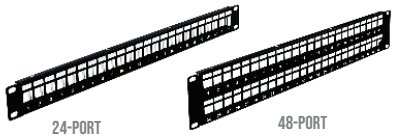

BLANK PATCH PANELS

- PART NO. BPPWM-24
- PART NO. BPPWM-48



CAT6A 110-TYPE PATCH PANELS

- PART NO. 6APP24
- PART NO. 6A PP48



14" RACK SHELVES VENTED/SOLID BOTTOM

- PART NO. SHELF-14SSV-1U
- PART NO. SHELF-14SSS-1U

PRODUCT SPECIFICATIONS

Part No.	H"	W"	Depth"	Overall Depth	RMU	Color	Weight	Material	Load Capacity
2POST-45U	84"	20.3"	3"	15"	#12-24/45U	BLK	38LB	SPCC/Steel Frame	1000 LBS

*COMPLIANCE: ANSI/EIA RS310D

Connecting the World

CALIFORNIA CORPORATE WAREHOUSE
Carson

TEXAS WAREHOUSE
The Colony

NEW JERSEY WAREHOUSE
Ridgefield

CANADA WAREHOUSE
Toronto / Vancouver

TOLL FREE. 888.492.8363 / WAVENETCABLE.COM