ENCLOSURE SOLUTIONS

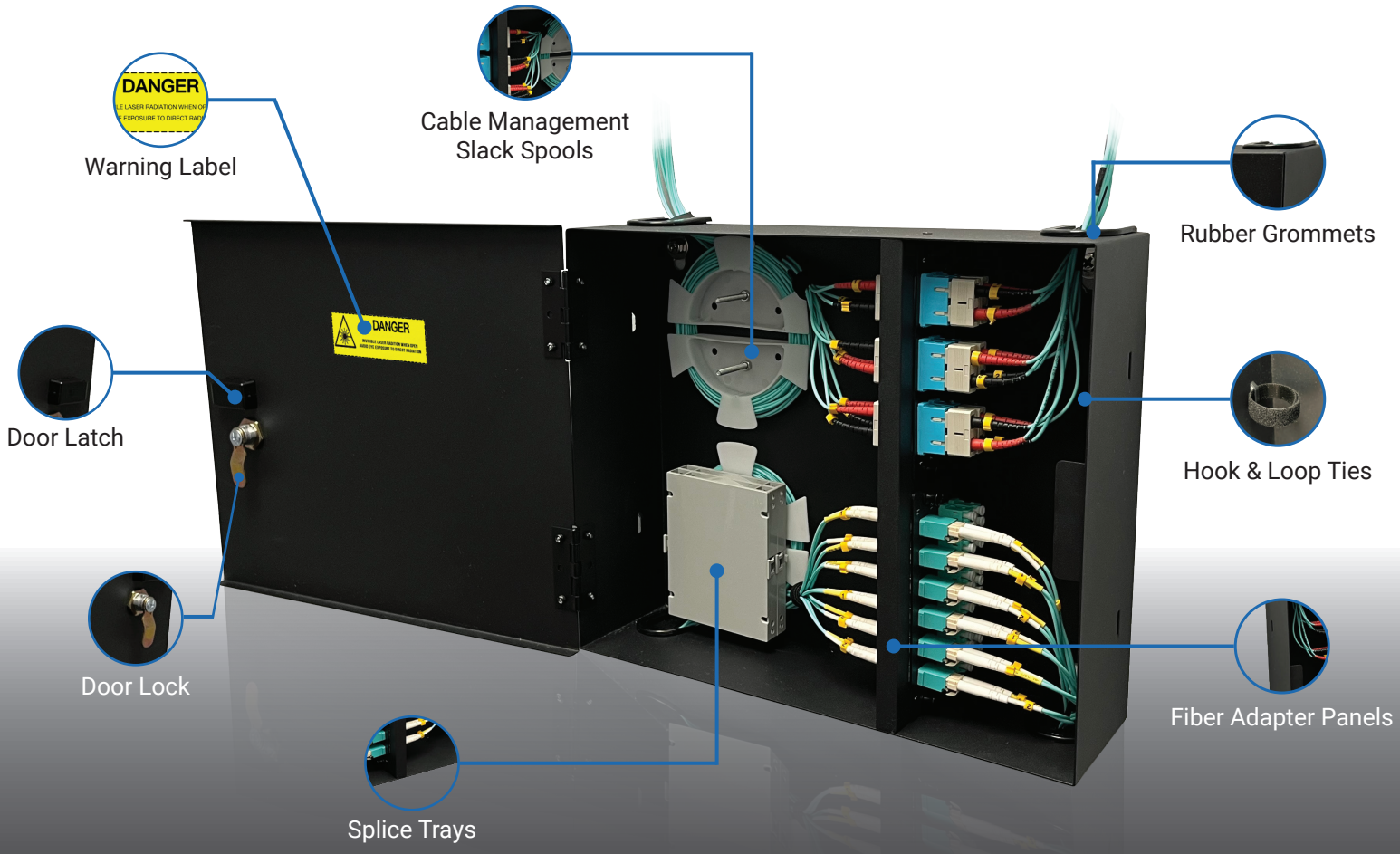

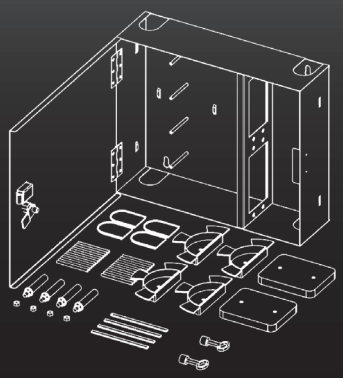

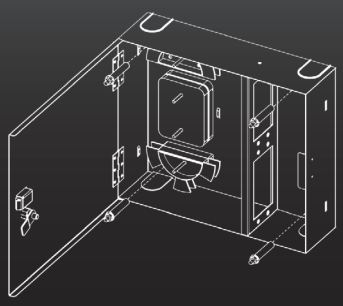

Step 1. Mount the enclosure on the wall.

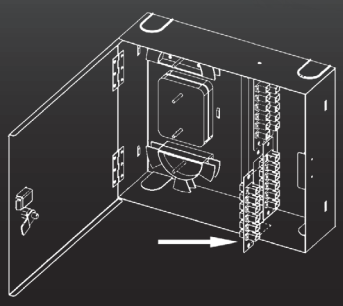

Step 2A. Install the fiber adapter panels.

Dimensions: 12.99" x 3.62" x 10.87"

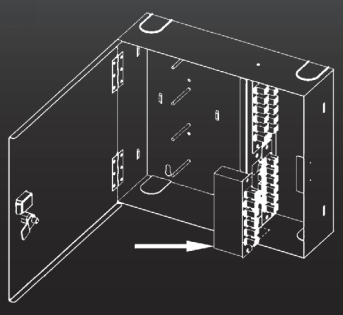

Step 2B. Install the fiber MPO cassettes.

Fiber optic adapter panels sold separately

Up to 96-Fiber Capacity
ANSI/TIA-568-C.3. LGX Compatible

Part No. WMFO-4P

Rack Mount Fiber Enclosure

3-Panel, 1U, 72-Fiber Capacity, w/ Two Splice Trays & Cable Slack Spools



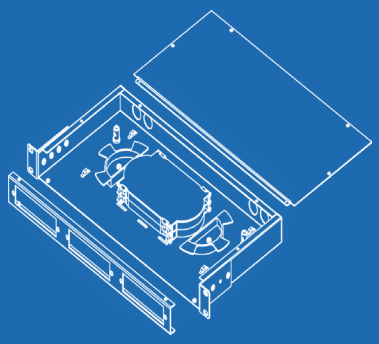

Part No. FRM3M1U

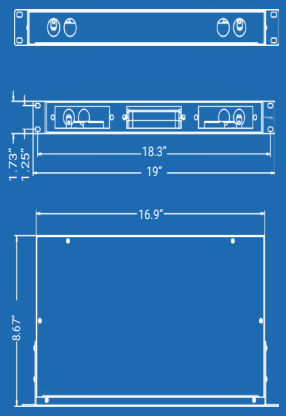

Dimensions: 19" x 8.67" x 1.74"

Fiber Adapter Panels & Blank Plates

LGX Compatible

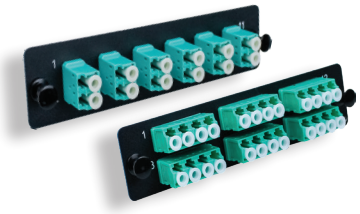

FM12LCOM3
» 12-port, Duplex, LC, MM, OM3, Aqua

FM24LCOM3
» 24-port, Quad, LC, MM, OM3, Aqua

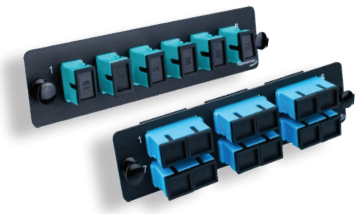

FM6SCOM3
» 6-port, Simplex, SC, MM, OM3, Aqua

FM12SCOM3
» 12-port, Duplex, SC, SM, OS2, Blue



FM6ST
» 6-port, Simplex, ST, MM, OM2

FMBP
» Blank Plate, Black

Fiber Keystone Style Couplers

Snap-In Keystone Compatible

FOKSALCWH
» LC Duplex, Zirconia Ceramic Sleeve, OM3, MM, Aqua, LC Adapter, White

FOKSBLCWH
» LC Duplex, Zirconia Ceramic Sleeve, OS2, SM, Blue, LC Adapter, White

FOKSBLCWH
» SC Simplex, Zirconia Ceramic Sleeve, SM, MM, Aqua, SC Adapter w/Shutter, White



wavenet Connecting the World

CALIFORNIA CORPORATE WAREHOUSE
Carson

TEXAS WAREHOUSE
The Colony

NEW JERSEY WAREHOUSE
Ridgefield

CANADA WAREHOUSE
Toronto / Vancouver

TOLL FREE. 888.492.8363 / WAVENETCABLE.COM