Connecting the World

wavenet

MDF-TO-IDF SOLUTIONS

6U, 9U, 12U, 15U, 18U WC SERIES™ WALL MOUNT CABINETS

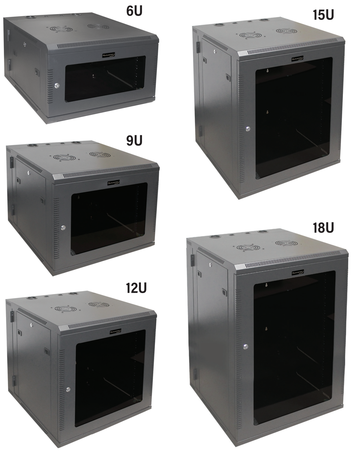

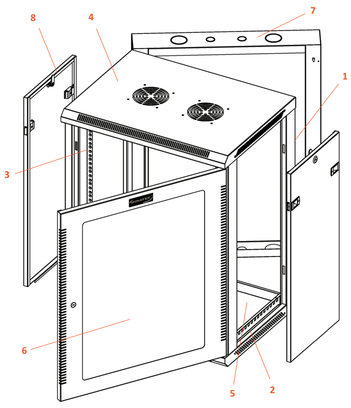

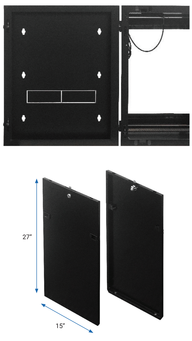

Component	Name	Quantity
1	Frame	1
2	Horizontal Bracket	4
3	Vertical Rail	2
4	Top Cover	1
5	Bottom Panel	1
6	Tempered Glass Front Door	1
7	Rear Swing Frame	1
8	Side Panel	2


Glass door


Ventilation holes


Side panel

Part Number	U Size	Width	Height	Depth	Usable Depth	Load Capacity	Fan	Rails
CBTF-WM6U	6U	23.6"	14.6"	23.6"	18.0"	85 lbs.	Pre-installed 50CFM Fan with extra slot for additional fan	#12-24 or #10-32
CBTF-WM9U	9U	23.6"	19.8"	23.6"	18.0"	90 lbs.		
CBTF-WM12U	12U	23.6"	25.0"	23.6"	18.0"	105 lbs.		
CBTF-WM15U	15U	23.6"	30.3"	23.6"	18.0"	120 lbs.		
CBTF-WM18U	18U	23.6"	35.6"	23.6"	18.0"	135 lbs.		

27U, 42U FC SERIES™ STANDING SERVER CABINETS



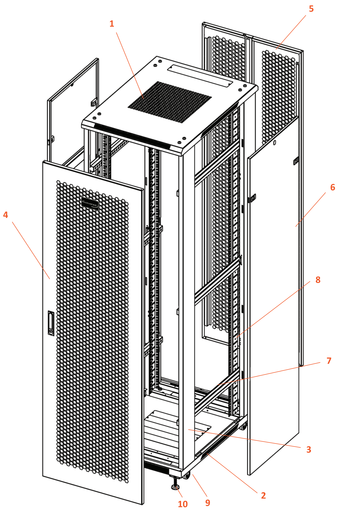



Component	Name	Quantity
1	Top Cover	1
2	Bottom Panel	1
3	Door Frame	2
4	Perforated Steel Front Door	1
5	Rear Door	1
6	Side Panel	2
7	Horizontal Beam	6
8	Vertical Rail	4
9	Castor (2 with Brake)	4
10	Levelling Feet	4


Ventilation holes

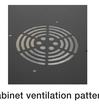
Cabinet ventilation pattern


Horizontal rails

Part Number	U Size	Width	Height	Depth	Usable Depth	Load Capacity	Fan	Rails
CBTF-FL27U-32	27U	25.2"	55.3"	33.1"	27.0"	1750 lbs.	Pre-installed tray with (4) 50 CFM fans	#12-24 Standard
CBTF-FL42U-32	42U	25.2"	81.6"	33.1"	27.0"	1750 lbs.		M6 Cage Nut
CBTF-FL27U-40	27U	25.2"	55.3"	40.9"	35.0"	1750 lbs.		
CBTF-FL42U-40	42U	25.2"	81.6"	40.9"	35.0"	1750 lbs.		

CALIFORNIA CORPORATE WAREHOUSE
Carson

TEXAS WAREHOUSE
The Colony

NEW JERSEY WAREHOUSE
Ridgefield

CANADA WAREHOUSE
Toronto / Vancouver

TOLL FREE. 888.492.8363

ONE MANUFACTURER. MANY SOLUTIONS.

Connecting the World

wavenet

MDF-TO-IDF SOLUTIONS

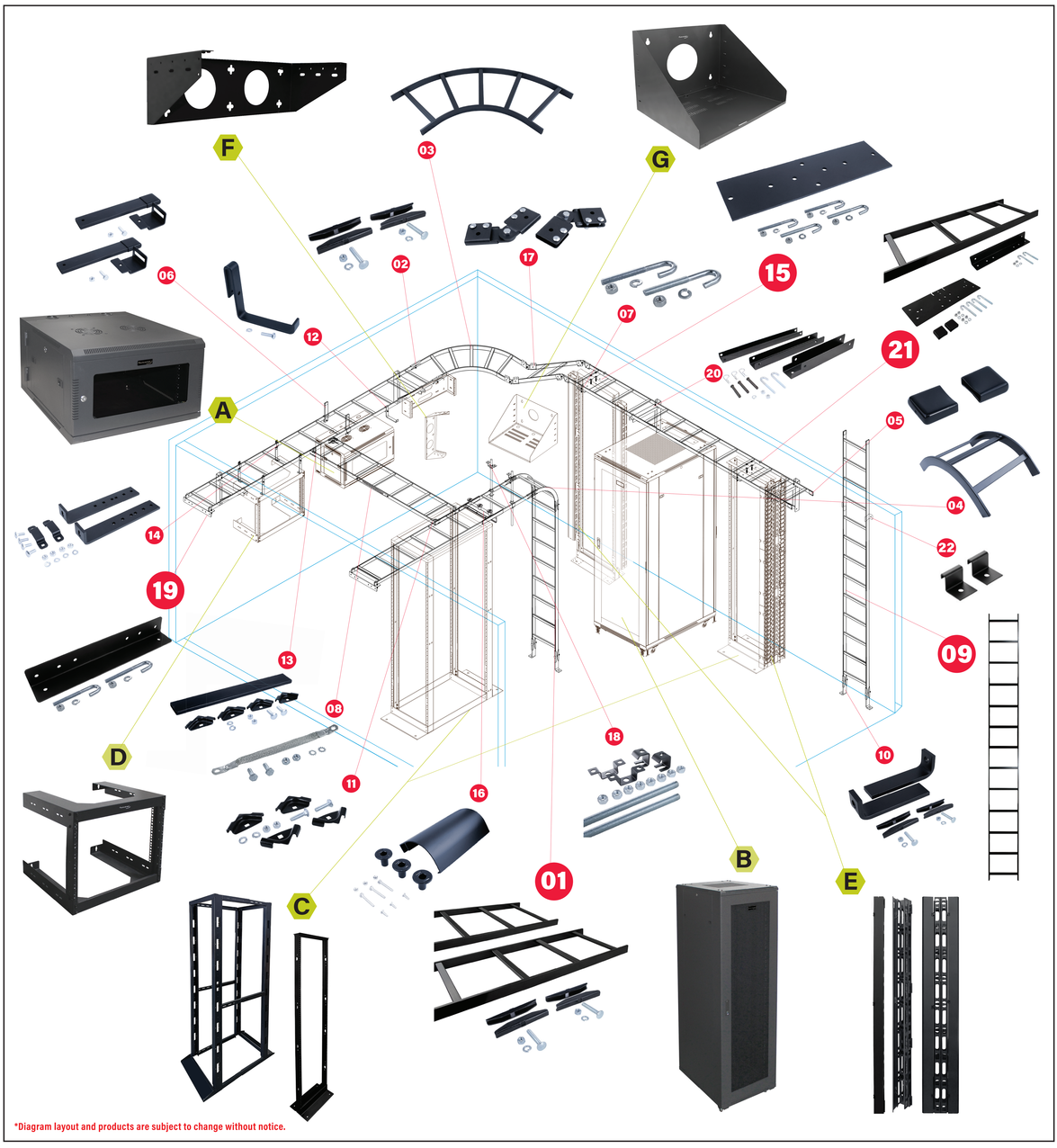

*Diagram layout and products are subject to change without notice.

Selection Guide for Cable Runway, Cabinets, Cable Management, Racks, Brackets and Accessory Solutions.

NUMBER	DESCRIPTION	PART#
01	(2) 5' Ladder Rack Runway w/ Butt-Splice Kit	WL-5SS2PC-KIT
02	Butt-Splice Kit, Pair	WL-BSKTPR-BK
03	Radius Horizontal Bend Ladder	WL-FT9012-BK
04	Universal Radius Bend Ladder	WL-IR9012-BK
05	Ladder Rack End Cap, Pair	WL-LRA2EC-BK
06	6" Retaining Post Kit, Pair	WL-LRA06RPK-BK
07	J-Bolt Kit (5/16"), Pair	WL-LRA300JK
08	Grounding Strap w/ Hardware	WL-LRAGK
09	10-Foot Cable Runway	WL-LR1210-BK
10	Floor Mount Bracket	WL-RA2FA-BK
11	T-Junction Bracket Kit	WL-RA2JT-BK

NUMBER	DESCRIPTION	PART#
12	L Bracket - Cable Runway	WL-RA5LB-BK
13	Ladder Termination Kit	WL-RA12TK-BK
14	Stand-Off Elevation Kit 4"- 6"	WL-RA46SK-BK
15	Rack To Runway Plate	WL-RA123RP-BK
16	Cable Radius Drop	WL-RASD-BK1
17	Butt Splice Kit - Swivel/Adjustable	WL-RASSK-BK
18	Ceiling Mount Kit 5/8"	WL-RATRCK-BK
19	Wall Angle Support Bracket	WL-WASB12-BK
20	Triangle Wall Support	WL-WSB12-BK
21	5' Ladder Rack Runway Bracket Kit	WLR1205-KIT
22	Vertical Wall Bracket	WL-LRAVWB

NUMBER	DESCRIPTION	PART#
A	Wall Mount Cabinets	CBTF-WM6U CBTF-WM9U CBTF-WM12U CBTF-WM15U CBTF-WM18U
B	Floor-Standing Cabinets	CBTF-FL27U-32 CBTF-FL42U-32 CBTF-FL27U-40 CBTF-FL42U-40
C	Open-Frame Racks	2POST-45U 4POST-45U
D	Wall Mount Racks	WMR-8U WMR-15U WMR-30U
E	Vertical Cable Managers	VCMC-4678S VCMC-41278D VCNB-3X3X7 4S VCNB-3X3X7 4D
F	Wall Mount Hinged Brackets	WMHB-1U WMHB-2U WMHB-3U WMHB-4U VWMB-4U
G	Solid Bottom Rack Shelves	WMS-18

CALIFORNIA CORPORATE WAREHOUSE
Carson

TEXAS WAREHOUSE
The Colony

NEW JERSEY WAREHOUSE
Ridgefield

CANADA WAREHOUSE
Toronto / Vancouver

TOLL FREE. 888.492.8363

ONE MANUFACTURER. MANY SOLUTIONS.